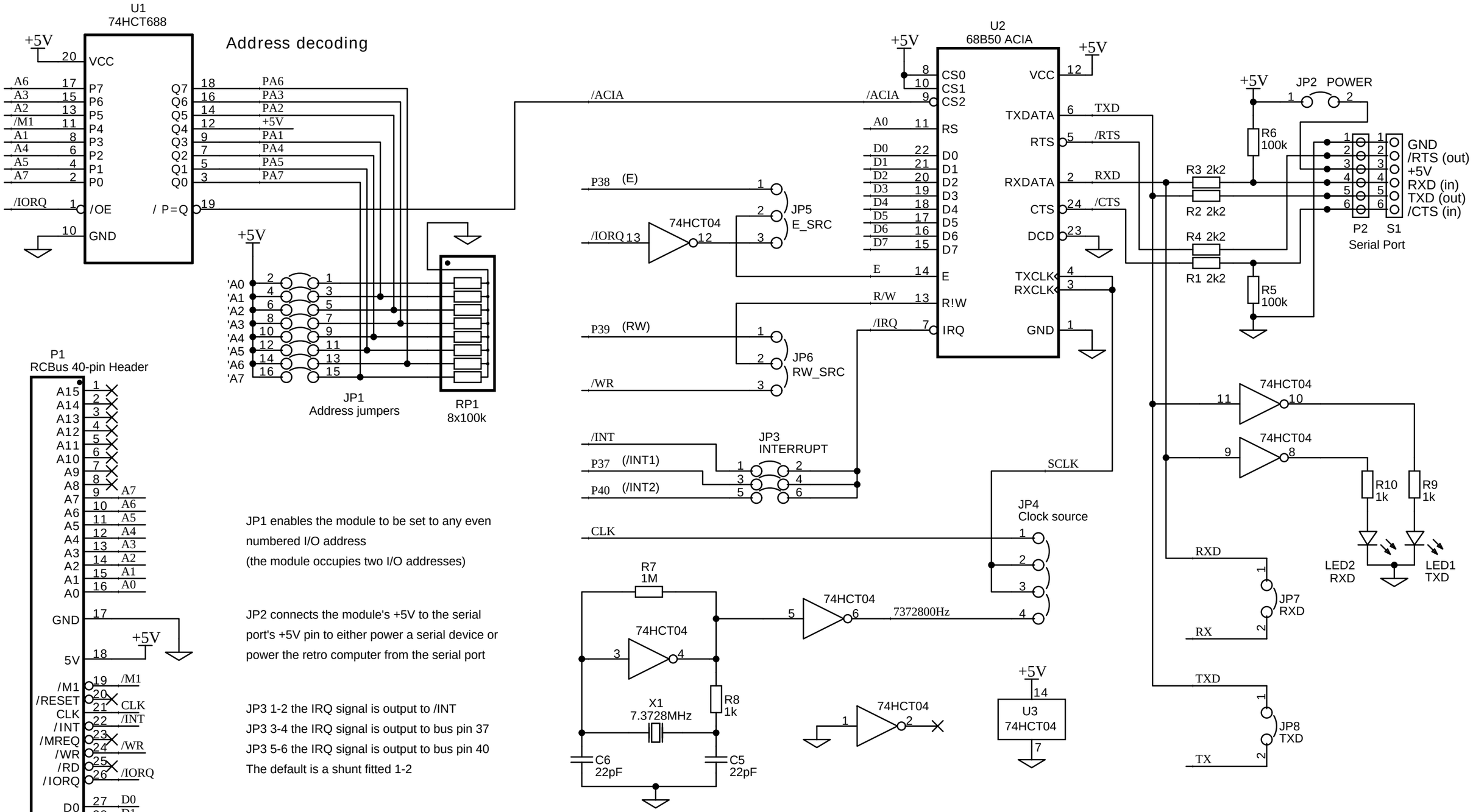

P1
RCBus 40-pin Header

Pin	Signal
1	A15
2	A14
3	A13
4	A12
5	A11
6	A10
7	A9
8	A8
9	A7
10	A6
11	A5
12	A4
13	A3
14	A2
15	A1
16	A0
17	GND
18	5V
19	/M1
20	/RESET
21	CLK
22	/INT
23	/MREQ
24	/WR
25	/RD
26	/IORQ
27	D0
28	D1
29	D2
30	D3
31	D4
32	D5
33	D6
34	D7
35	TX
36	RX
37	p37 (/INT1)
38	p38 (E)
39	p39 (RW)
40	p40 (/INT2)

JP1 enables the module to be set to any even numbered I/O address (the module occupies two I/O addresses)

JP2 connects the module's +5V to the serial port's +5V pin to either power a serial device or power the retro computer from the serial port

JP3 1-2 the IRQ signal is output to /INT
JP3 3-4 the IRQ signal is output to bus pin 37
JP3 5-6 the IRQ signal is output to bus pin 40
The default is a shunt fitted 1-2

JP4 1-2 Connects bus CLK to serial clock
JP4 3-4 Connects bus onboard oscillator to serial clock
Both options together enable the onboard oscillator to provide the clock for the serial port and the bus
The default is a shunt fitted 3-4

JP5 1-2 the E signal is provided by bus pin 38
JP5 2-3 the E signal is provided by IORQ
The default is a shunt fitted 2-3

JP6 1-2 the RW signal is provided by bus pin 39
JP6 2-3 the RW signal is provided by /WR
The default is a shunt fitted 2-3

JP7 and JP8 enable the serial RX and TX signals to be connected to bus pins 36 and 35

Title:	SC610: Serial ACIA for RCBus 40 pin	Schematic: v1.0.0
Date:	2024-10-08 Created: 2024-10-06	Sheet: 1 of 1
Designer:	Stephen C Cousins, Small Computer Central, www.scc.me.uk	