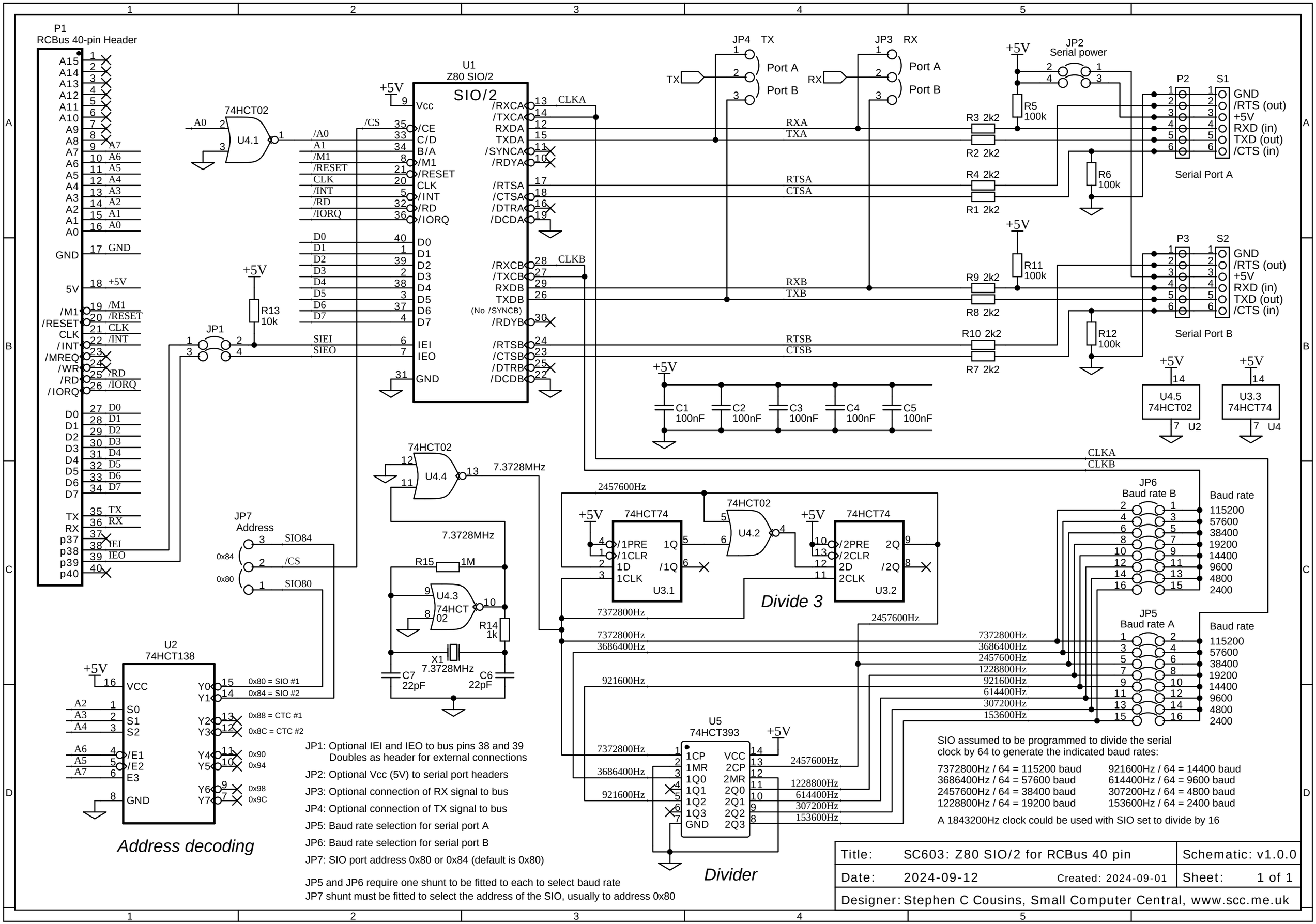
P1
RCBus 40-pin Header
U1
Z80 SIO/2
SIO/2
74HCT02
U4.1
U4.4
U4.3
74HCT02
JP1
JP2
Serial power
JP3 RX
JP4 TX
Port A
Port B
P2
S1
P3
S2
GND
/RTS (out)
+5V
RXD (in)
TXD (out)
/CTS (in)
Serial Port A
Serial Port B
R3 2k2
R2 2k2
R4 2k2
R1 2k2
R9 2k2
R8 2k2
R10 2k2
R7 2k2
R5 100k
R6 100k
R11 100k
R12 100k
R13 10k
C1 100nF
C2 100nF
C3 100nF
C4 100nF
C5 100nF
U4.5 74HCT02
U3.3 74HCT74
7.3728MHz
R15 1M
R14 1k
X1 7.3728MHz
C7 22pF
C6 22pF
JP7 Address
0x84
0x80
SIO84
/CS
SIO80
U2
74HCT138
0x80 = SIO #1
0x84 = SIO #2
0x88 = CTC #1
0x8C = CTC #2
0x90
0x94
0x98
0x9C
Address decoding
JP6 Baud rate B
JP5 Baud rate A
Baud rate
115200
57600
38400
19200
14400
9600
4800
2400
74HCT74
U3.1
U3.2
Divide 3
2457600Hz
7372800Hz
3686400Hz
921600Hz
1228800Hz
614400Hz
307200Hz
153600Hz
U5
74HCT393
Divider
JP1: Optional IEI and IEO to bus pins 38 and 39
Doubles as header for external connections
JP2: Optional Vcc (5V) to serial port headers
JP3: Optional connection of RX signal to bus
JP4: Optional connection of TX signal to bus
JP5: Baud rate selection for serial port A
JP6: Baud rate selection for serial port B
JP7: SIO port address 0x80 or 0x84 (default is 0x80)
JP5 and JP6 require one shunt to be fitted to each to select baud rate
JP7 shunt must be fitted to select the address of the SIO, usually to address 0x80
SIO assumed to be programmed to divide the serial clock by 64 to generate the indicated baud rates:
7372800Hz / 64 = 115200 baud
3686400Hz / 64 = 57600 baud
2457600Hz / 64 = 38400 baud
1228800Hz / 64 = 19200 baud
921600Hz / 64 = 14400 baud
614400Hz / 64 = 9600 baud
307200Hz / 64 = 4800 baud
153600Hz / 64 = 2400 baud
A 1843200Hz clock could be used with SIO set to divide by 16
Title: SC603: Z80 SIO/2 for RCBus 40 pin
Schematic: v1.0.0
Date: 2024-09-12
Created: 2024-09-01
Sheet: 1 of 1
Designer: Stephen C Cousins, Small Computer Central, www.scc.me.uk