Power: 5V, 0V - Z80 signals: Address bus A0-A15, Data bus D0-D7, /RFSH, /BUSACK, /HALT, /BUSREQ, /WAIT, /NMI, /M1, /RESET, /CLK, /INT, /MREQ, /WR, /RD, /IOREQ - Other signals: TX, RX, RA16, RAM, FA15, FA16, /PAGE

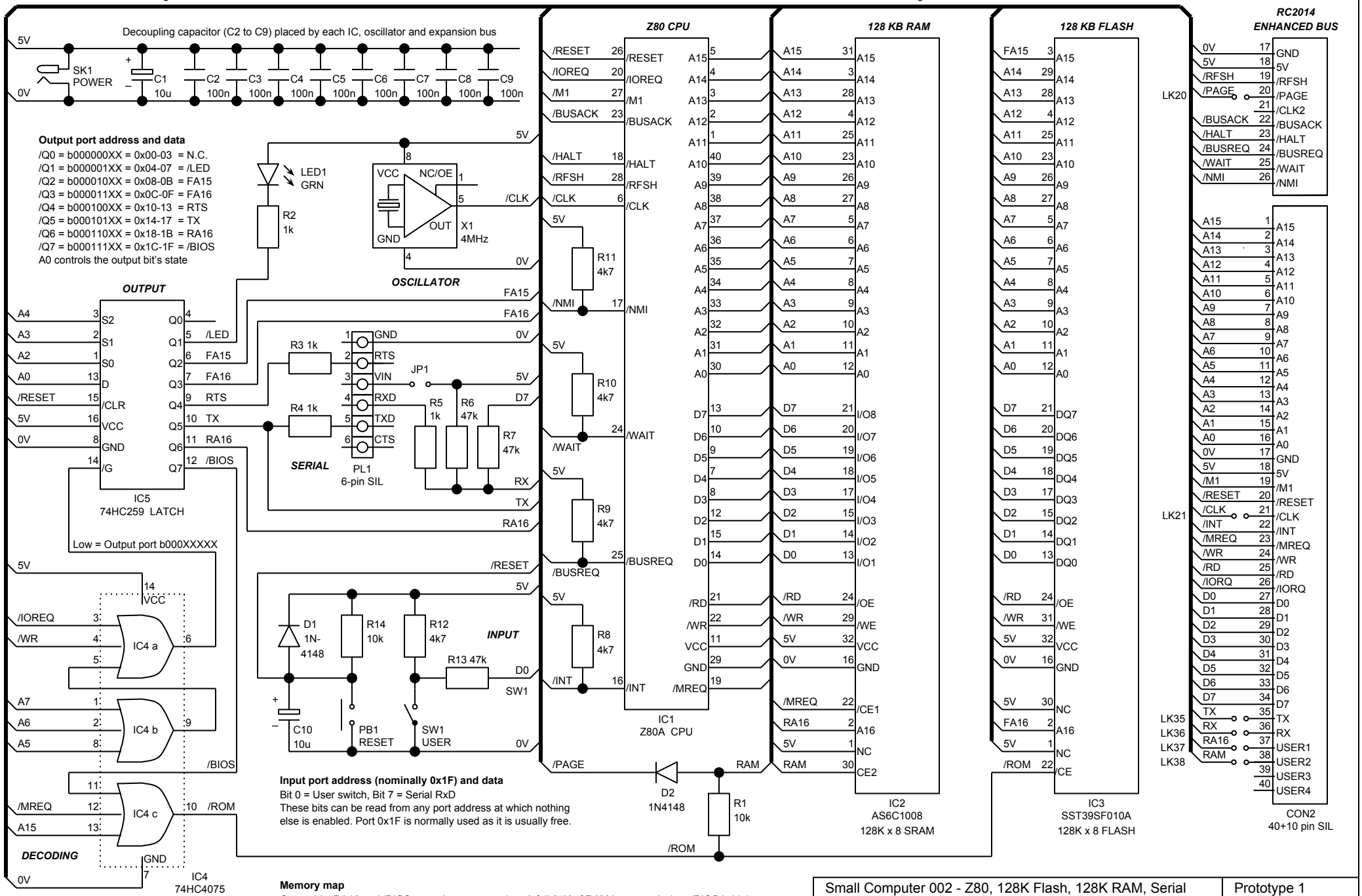

Small Computer 002 - Z80, 128K Flash, 128K RAM, Serial			Prototype 1
Stephen C Cousins	2017-11-15	Sheet 1 of 1	Schematic v0.06